US011216665B2

(12) **United States Patent**
Drake et al.

(10) **Patent No.: US 11,216,665 B2**
(45) **Date of Patent: Jan. 4, 2022**

(54) **REPRESENTATION OF REAL-WORLD FEATURES IN VIRTUAL SPACE**

(71) Applicant: **Disney Enterprises, Inc.**, Burbank, CA (US)

(72) Inventors: **Corey D. Drake**, Sunland, CA (US); **Timothy M. Panec**, Studio City, CA (US); **Tritia V. Medrano**, Rowland Heights, CA (US); **Stephen A. Thornton**, Burbank, CA (US); **Jason A. Yeung**, Glendale, CA (US); **Nathan D. Nocon**, Valencia, CA (US); **Elliott H. Baumbach**, Porter Ranch, CA (US)

(73) Assignee: **Disney Enterprises, Inc.**, Burbank, CA (US)

(*) Notice: Subject to any disclaimer, the term of this patent is extended or adjusted under 35 U.S.C. 154(b) by 0 days.

(21) Appl. No.: **16/541,910**

(22) Filed: **Aug. 15, 2019**

(65) **Prior Publication Data**

US 2021/0049361 A1 Feb. 18, 2021

(51) **Int. Cl.**

G06K 9/00	(2006.01)
G06F 16/58	(2019.01)
G06T 7/70	(2017.01)
H02J 50/20	(2016.01)
H04W 4/021	(2018.01)
H04L 29/08	(2006.01)
G06T 19/00	(2011.01)

(52) **U.S. Cl.**

CPC ***G06K 9/00671*** (2013.01); ***G06F 16/5866*** (2019.01); ***G06T 7/70*** (2017.01); ***G06T 19/006*** (2013.01); ***H02J 50/20*** (2016.02); ***H04L 67/12*** (2013.01); ***H04W 4/021*** (2013.01)

(58) **Field of Classification Search**

CPC G06K 9/00671; G06F 16/5866; H04W 4/021; H04L 67/12; G06T 19/006; G06T 7/70; H02J 50/20

See application file for complete search history.

(56) **References Cited**

U.S. PATENT DOCUMENTS

8,797,321	B1 *	8/2014	Bertolami	G06T 15/50 345/426
10,403,103	B1 *	9/2019	Kugler	G08B 29/046
2005/0073531	A1 *	4/2005	Kuroki	G06T 19/006 345/633
2008/0211813	A1 *	9/2008	Jamwal	G06T 15/60 345/426
2011/0316845	A1 *	12/2011	Roberts	G06T 19/006 345/419

(Continued)

FOREIGN PATENT DOCUMENTS

JP 2012083847 A * 4/2012

Primary Examiner — William A Beutel

(74) *Attorney, Agent, or Firm* — Patterson + Sheridan, LLP

(57) **ABSTRACT**

Embodiments provide for an augmented reality (AR) system able to track the movement of real-world objects and apply that movement to virtual objects. The AR system includes a radio configured to receive first sensor data from a sensor attached to a first physical object in physical space. The AR system further includes a processor configured to determine when a physical object changes from a first state to a second state object based on the first sensor data, and update an environmental map based on the change from the first state to the second state of the first physical object.

19 Claims, 7 Drawing Sheets

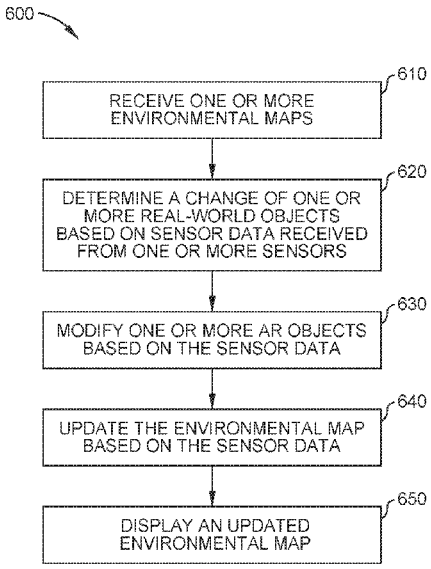

(56) **References Cited**

U.S. PATENT DOCUMENTS

2015/0130790	A1*	5/2015	Vasquez, II	G06T 19/006 345/419
2018/0114124	A1*	4/2018	Cronn	A61B 5/165
2018/0144525	A1*	5/2018	Gutierrez	G06T 19/003
2018/0356881	A1*	12/2018	Belverato	G06F 13/387
2019/0179426	A1*	6/2019	Ojala	H03M 13/3761

* cited by examiner

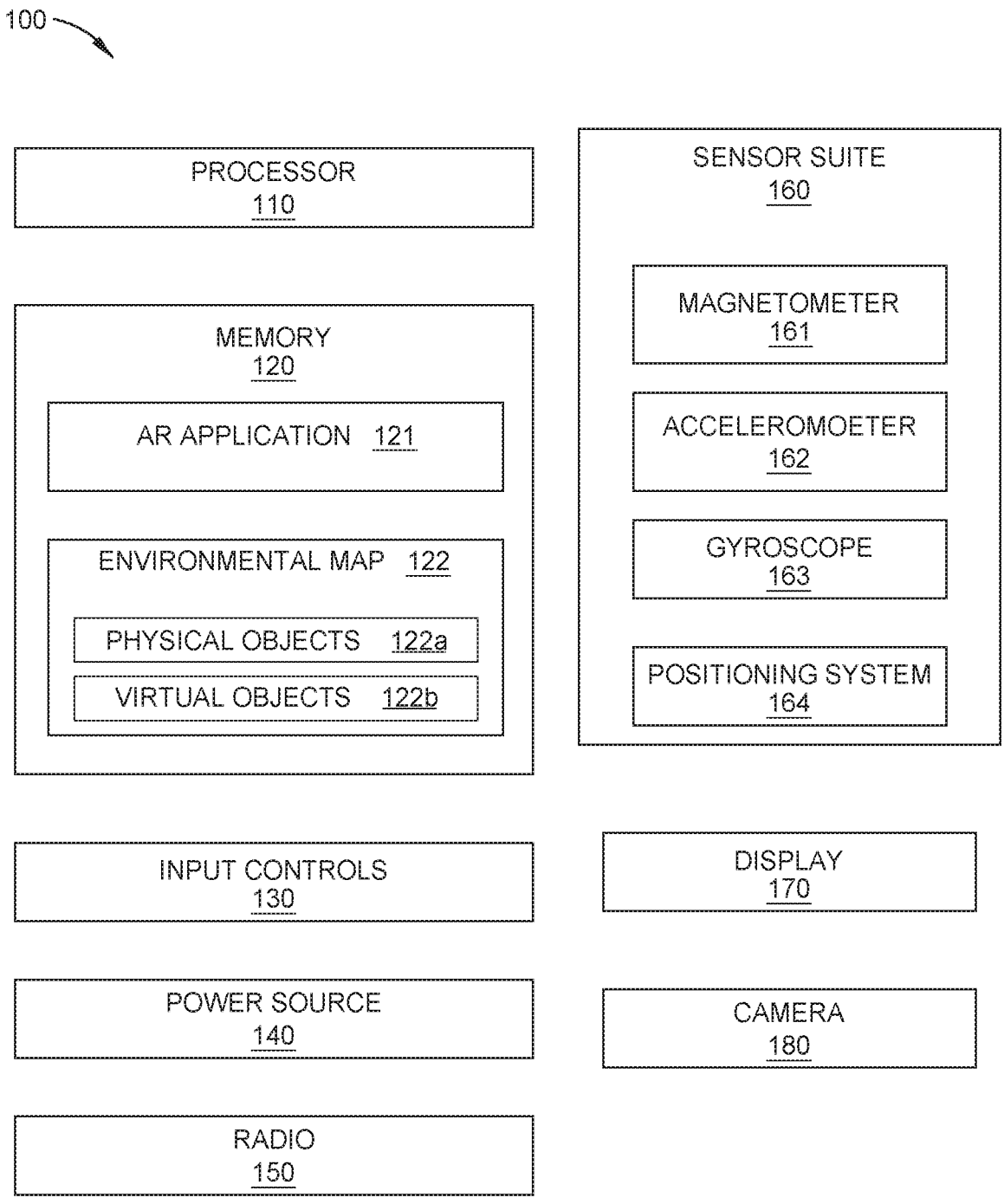
100
PROCESSOR
110
MEMORY
120
AR APPLICATION 121
ENVIRONMENTAL MAP 122
PHYSICAL OBJECTS 122a
VIRTUAL OBJECTS 122b
INPUT CONTROLS
130
POWER SOURCE
140
RADIO
150
SENSOR SUITE
160
MAGNETOMETER
161
ACCELEROMOETER
162
GYROSCOPE
163
POSITIONING SYSTEM
164
DISPLAY
170
CAMERA
180

FIG. 1

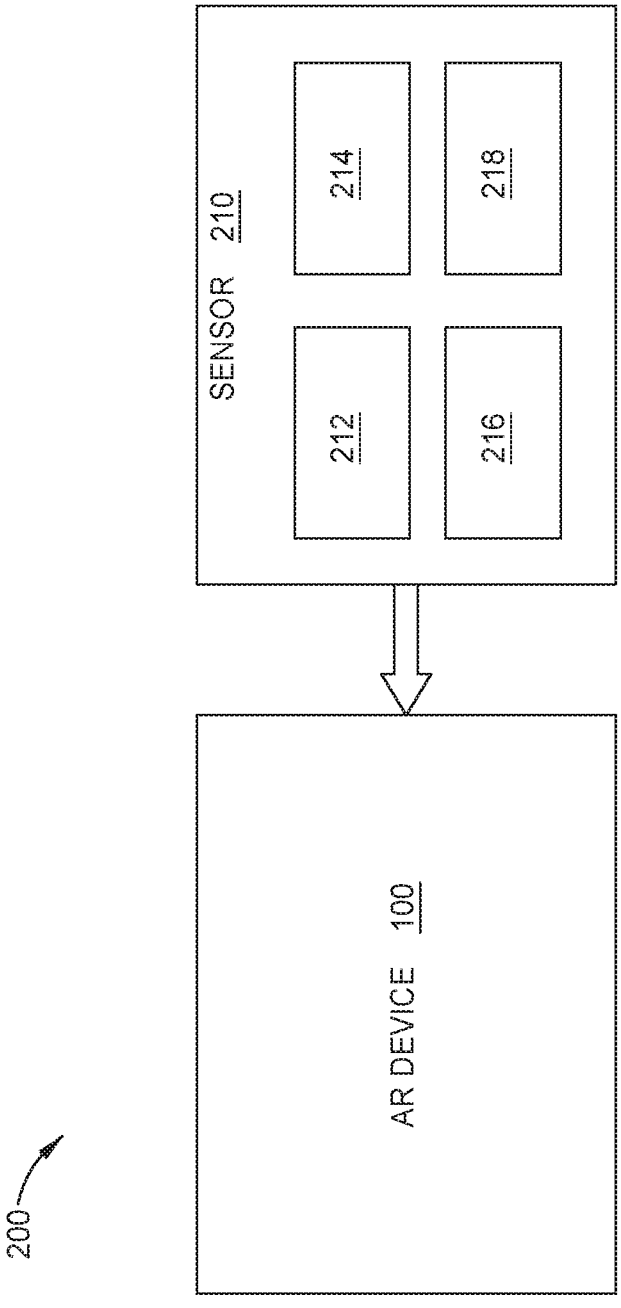

FIG. 2

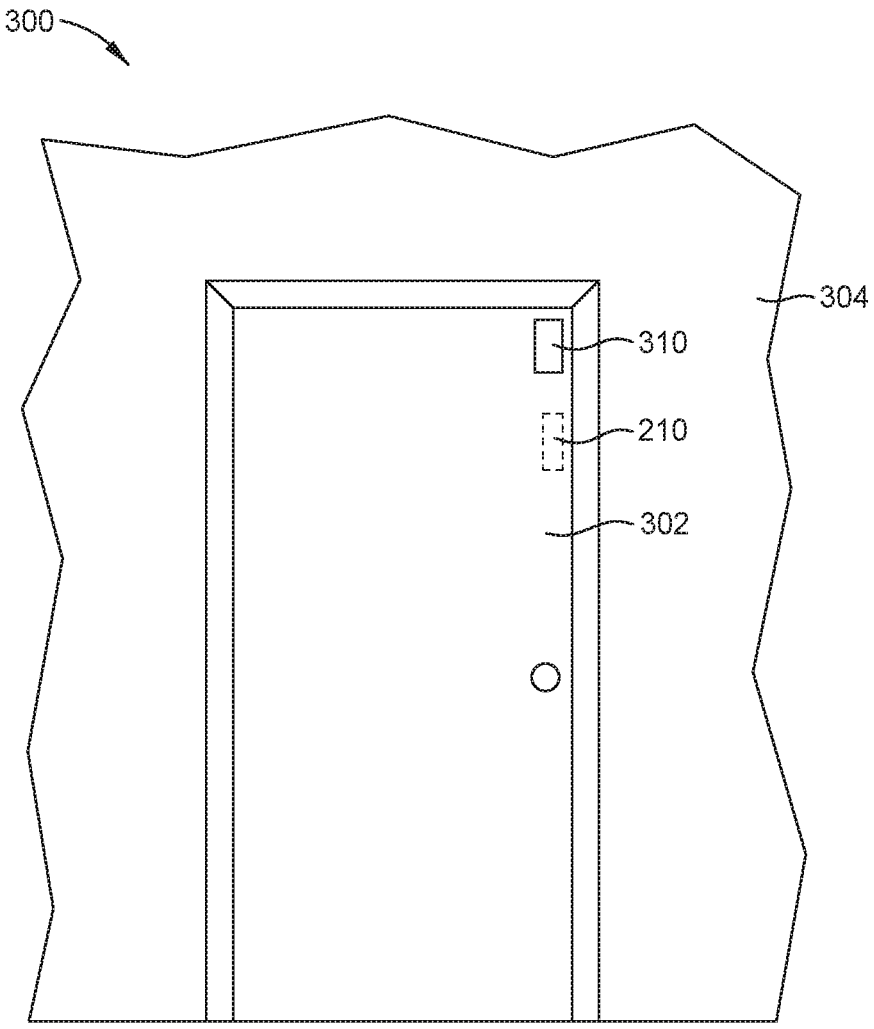

FIG. 3

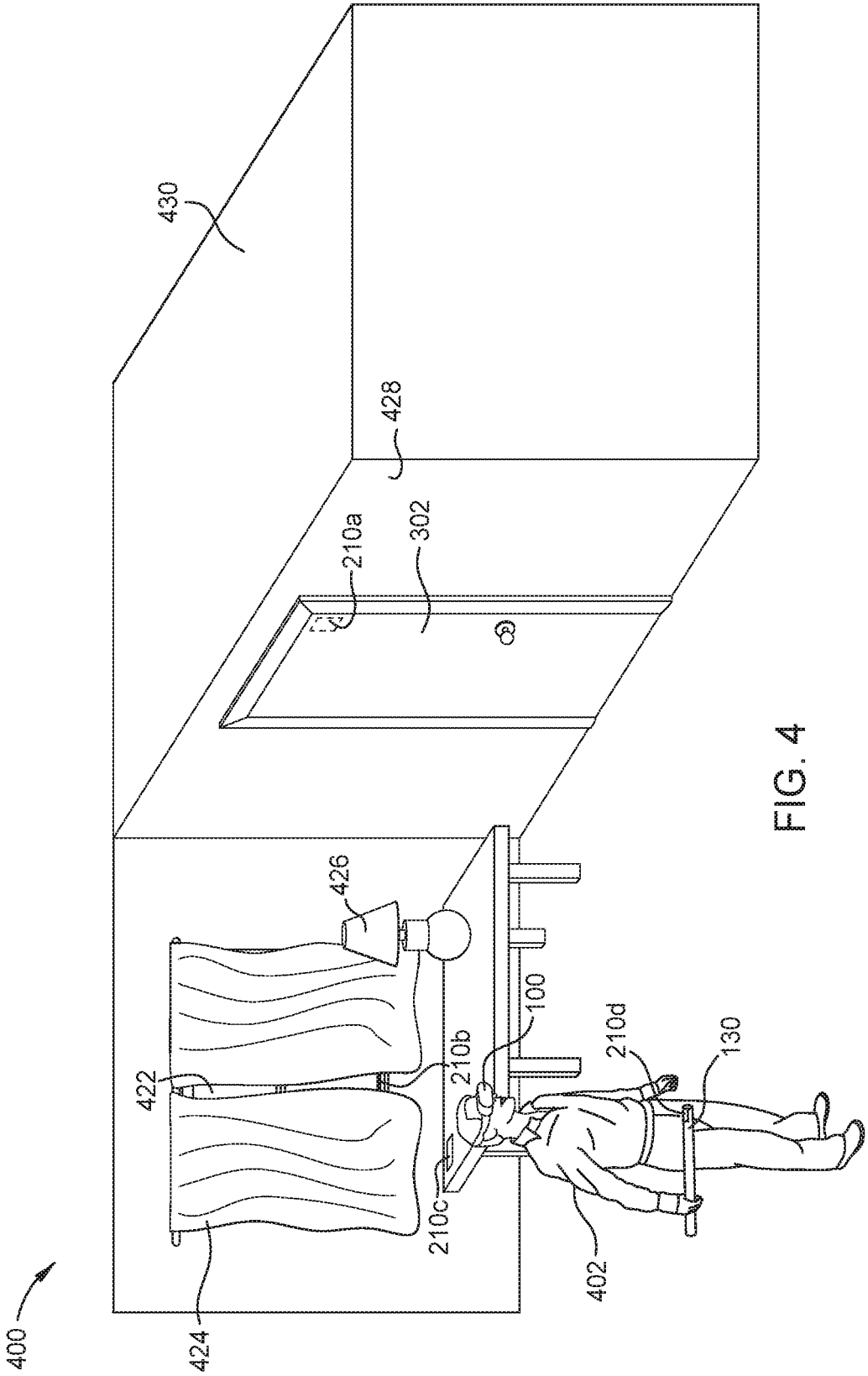

FIG. 4

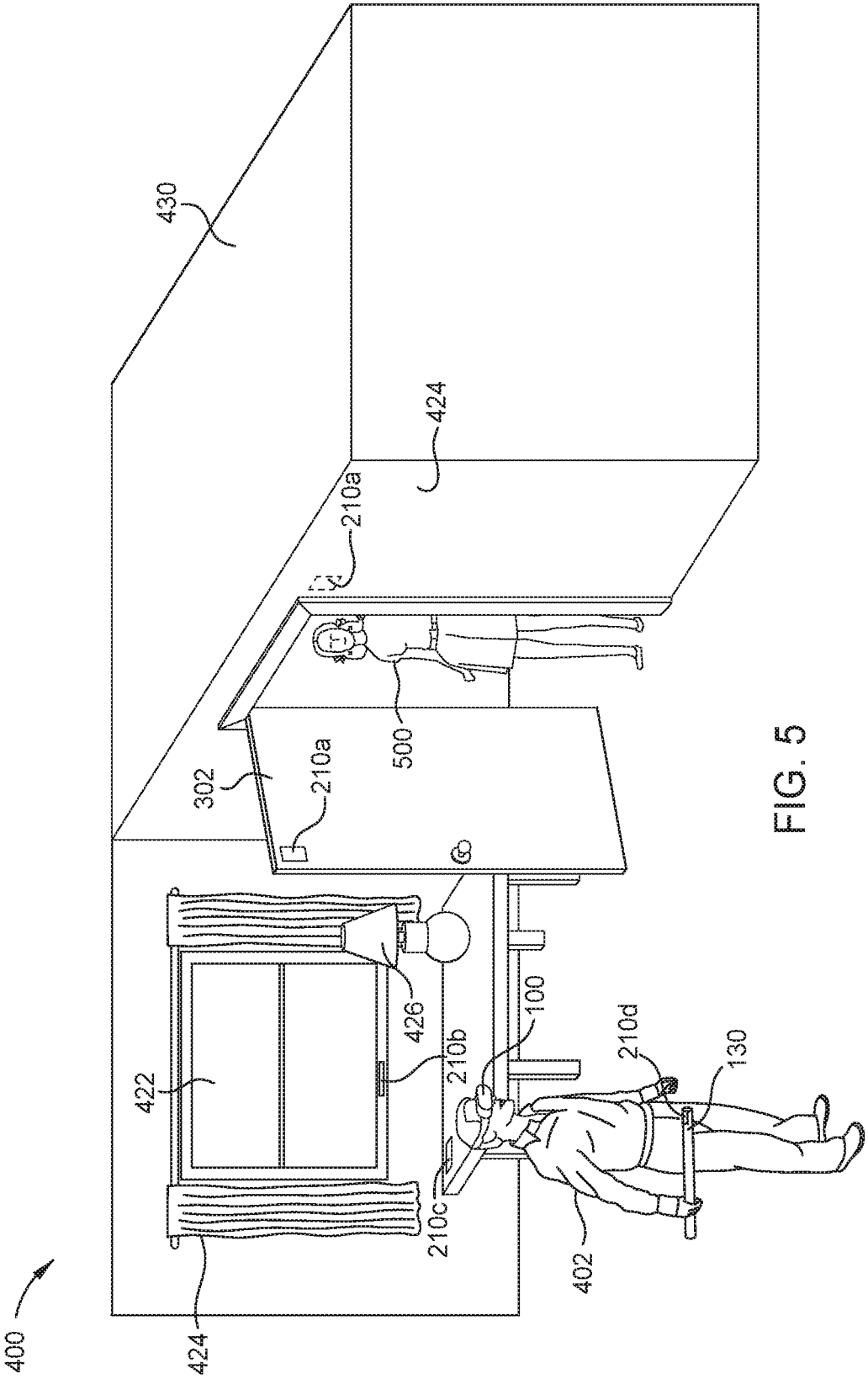
430
424
210a
500
302
210a
426
100
210d
130
422
210b
210c
402
424
400

FIG. 5

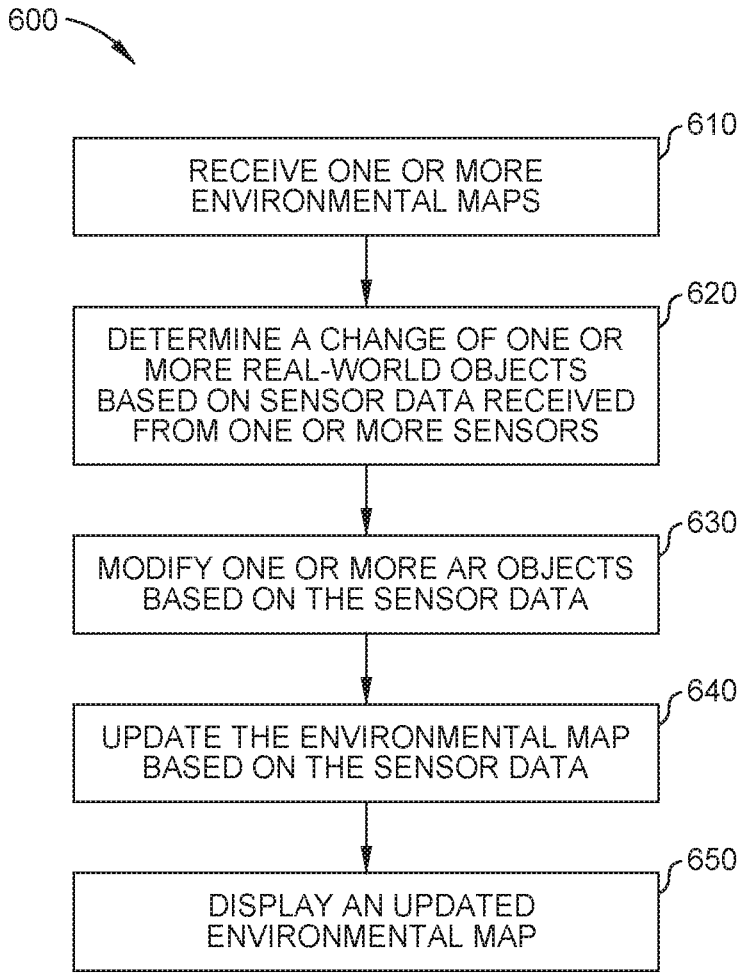
600
610
RECEIVE ONE OR MORE ENVIRONMENTAL MAPS
620
DETERMINE A CHANGE OF ONE OR MORE REAL-WORLD OBJECTS BASED ON SENSOR DATA RECEIVED FROM ONE OR MORE SENSORS
630
MODIFY ONE OR MORE AR OBJECTS BASED ON THE SENSOR DATA
640
UPDATE THE ENVIRONMENTAL MAP BASED ON THE SENSOR DATA
650
DISPLAY AN UPDATED ENVIRONMENTAL MAP

FIG. 6

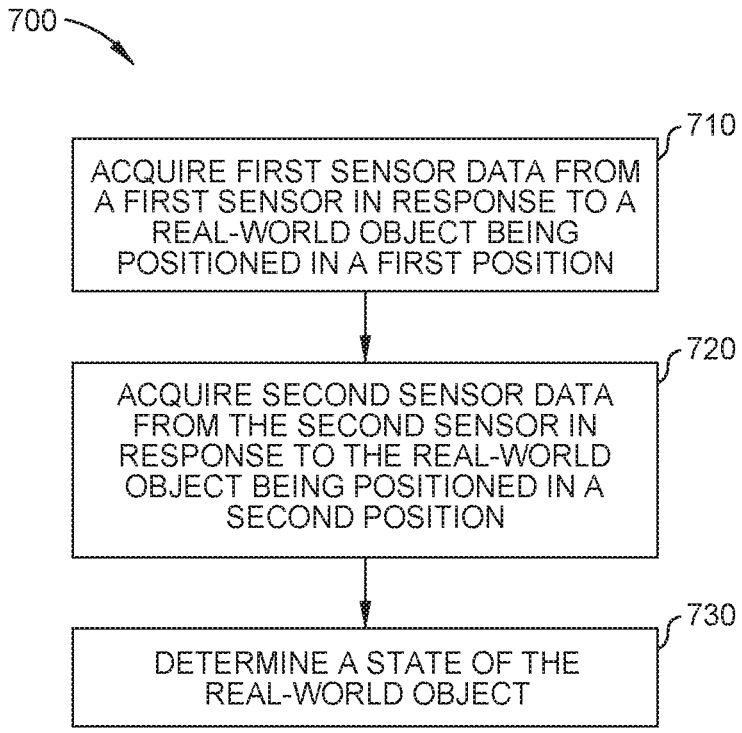
700
710
ACQUIRE FIRST SENSOR DATA FROM A FIRST SENSOR IN RESPONSE TO A REAL-WORLD OBJECT BEING POSITIONED IN A FIRST POSITION
720
ACQUIRE SECOND SENSOR DATA FROM THE SECOND SENSOR IN RESPONSE TO THE REAL-WORLD OBJECT BEING POSITIONED IN A SECOND POSITION
730
DETERMINE A STATE OF THE REAL-WORLD OBJECT

FIG. 7

REPRESENTATION OF REAL-WORLD FEATURES IN VIRTUAL SPACE

BACKGROUND

In many instances, one or more mapping algorithms are utilized to generate and/or update environmental maps utilized by an augmented reality (AR) system. The mapping algorithms generate virtual depictions of real-world objects within the environmental maps. One example mapping algorithm is a simultaneous localization and mapping (SLAM) algorithm. However, the mapping algorithms are often unable to properly map moving real-world objects, resulting in artifacts and/or misrepresented real-world objects. For example, an AR object may not be moved or moved too slowly in response to movement of a corresponding real-world object, resulting in a poor user experience. In some instances, tracking system may be utilized to track the movement of real-world objects and aid in updating environmental maps. However, these tracking systems are expensive and complex, limiting the possible applications in which such tracking systems may be utilized.

SUMMARY

In one embodiment, a method for updating an environmental map of an augmented reality (AR) system comprises receiving first sensor data from a sensor attached to a first physical object in physical space and determining a change from a first state to a second state of the first physical object based on the first sensor data. The method further comprises updating the environmental map based on the change from the first state to the second state of the first physical object, and updating a presentation based on the updated environmental map.

A non-transitory computer-readable medium containing computer program code that, when executed by operation of one or more computer processors, performs an operation comprising receiving first sensor data from a sensor attached to a first physical object in physical space, determining a change from a first state to a second state of the first physical object based on the first sensor data, updating an environmental map based on the change from the first state to the second state of the first physical object, and displaying the updated environmental map on a display of an augmented reality system.

An augmented reality system comprising a display, a radio and a processor. The radio is configured to receive first sensor data from a sensor attached to a first physical object in physical space. The processor is configured to determine a change from a first state of the physical object to a second state of the first physical object based on the first sensor data, and update an environmental map based on the change from the first state to the second state of the first physical object. The processor is further configured to display the updated environmental map on the display.

BRIEF DESCRIPTION OF THE DRAWINGS

So that the manner in which the above recited aspects are attained and can be understood in detail, a more particular description of embodiments described herein, briefly summarized above, may be had by reference to the appended drawings.

It is to be noted, however, that the appended drawings illustrate typical embodiments and are therefore not to be considered limiting; other equally effective embodiments are contemplated.

FIG. **1** is a schematic representation of an augmented reality system, according to one or more embodiments.

FIG. **2** is an example augmented reality sensing system, according to one or more embodiments.

FIGS. **3**, **4**, and **5** illustrate various real-world environments, according to one or more embodiments.

FIGS. **6** and **7** are flow charts of method for interacting with an augmented reality system, according to one or more embodiments.

DETAILED DESCRIPTION

Gathering information and generating AR depictions of real-world objects is difficult as current AR algorithms are slow to respond to the change in position of real-world objects—e.g., opening or closing of a door or the change in a lighting condition. However, sensors may be placed on real-world objects and used to communicate position information for the real-world objects to an AR system. The corresponding sensor data may be used to determine the position or the change in position of the real-world objects which may be used to more accurately update an environmental map. Through the use of dedicated sensors, AR applications may update environmental maps without the use of complicated and slow to respond mapping algorithms.

FIG. **1** illustrates an AR system **100**. The AR system **100** includes a processor **110**, a memory **120**, and various hardware elements to provide a user with an AR experience. In various embodiments, the AR system **100** may be an AR headset or a general computing device (e.g., a smart phone, a tablet computer, a laptop computer) that provides an AR experience.

The processor **110** and the memory **120** provide computing functionality to the AR system **100**. The memory **120** may be one or more memory devices, such as, for example, Random Access Memory (RAM), Read Only Memory (ROM), flash memory, or any other type of volatile or non-volatile storage medium that includes instructions that the processor **110** may execute. The processor **110** may process data received from one or more elements of the AR system **100**. For example, the processor **110** may executes commands based on inputs received from the input controls **130**. Further, the processor **110** may instruct the display **170** to display an updated environmental map based on sensor data received by the radio **150**. In various embodiments, the processor **110** may be processor capable of performing the functions described herein. In one embodiment, the processor **110** is a general processing computer, such as a central processing unit (CPU) of the AR system **100**. Further, the processor may be an application specific integrated controller (ASIC).

The memory **120** generally includes program code for performing various functions related providing an AR experience to a user. The program code is generally described as various functional "applications" or "modules" within the memory **120**, although alternate implementations may have different functions or combinations of functions. The memory **120** also generally includes data structures that may store information for use by the various program code modules also stored thereon. For example, the memory **120** includes program code for an AR application **121** and data structures for environmental maps **122**. Further, other applications and data structures may also be included by the memory **120**.

The AR application **121** is generally configured to provide functionality to overlay AR objects onto a video feed of the environment. In some embodiments, the code for the AR

application **121** is provided to manage commands sent to and data feeds received from one or more remote devices (e.g., a sensor **210** discussed in greater detail in relation to FIG. **2**) as well as various sensors included in a sensor suite **160** of the AR system **100**.

In various embodiments, the AR application **121** is provided one or more environmental maps **122** to aid in providing the AR experience to a user. The AR application **121** may generate or update the environmental maps **122** at startup of the AR system **100** or in response to a command or sensor data received from a remote device (e.g., the sensor **210**). Generating and/or updating the environmental maps **122** may include overlaying one or more AR objects within the environmental maps and/or updating the position of one or more AR objects within the environmental maps. Environmental maps **122** include positional data for various real-world and virtual objects for use in the AR experience by the AR application **121**. The positional data may be indicated via relative coordinates (e.g., X meters from another object, X meters from the AR system **100**) or by absolute coordinates (e.g., at latitude X and longitude Y), include positions of various components of the object (e.g., facial expressions, poses/limb positions, open/closed statuses), and include orientations of the object in the environment (e.g., facing X direction). Various real-world objects (e.g., physical objects **122***a*) may be classified and identified in the environmental map **122** (e.g., a tree, a road, a wall, a door, a person, etc.) via image recognition or signals transmitted (e.g., a sensor data transmitted by a sensor **210** attached to the object) and depicted as virtual objects **122***b*.

The AR system **100** includes one or more input controls **130** to receive input from a user to control the AR experience. The input controls **130** may include physical joysticks, physical steering wheels/yokes, physical buttons, physical switches, microphones, and a touch interface that designates various regions for use as virtual joysticks, buttons, switches, etc. A user may manipulate the various input controls **130** to signal the AR application **121** to alter the AR experience, select from various environmental maps **122**, shut down the AR system **100**, switch to a different application, change system settings (e.g., volume, brightness), etc. In one embodiment, the input controls **130** may be separate from one or more other elements of the AR system **100**. For example, the input controls **130** may be separate from the display **170** and/or the sensor suite **160**.

The power source **140** provides electric power to the various components of the AR system **100**. Various examples of power sources **140** include batteries (rechargeable and non-rechargeable), Alternating Current to Direct Current (AC/DC) converters, Direct Current to Alternating Current (DC/AC) converters, transformers, capacitors, inductors, and wiring to connect to an external power source **140**.

The radio **150** provides wireless communications for the AR system **100**. In various embodiments, the radio **150** is a transmitter and/or receiver, which receives signals from external sources and transmits signals to external devices. The radio **150** may be in communication with various antennas and transmit and receive messages according to various standards, such as, Bluetooth, Bluetooth Low Energy, Wi-Fi, or a proprietary standard, among others. The radio **150** may include receiver circuitry that is configured to receive signals from the one or more remote devices (e.g., the sensor **210**). The receiver circuitry may be wireless receiver circuitry.

The sensor suite **160** includes a magnetometer **161**, an accelerometer **162**, a gyroscope **163**, and a positioning system **164**, among other sensors. In various embodiments, the sensor suite **160** may additionally, or alternatively, include line of sight sensors, e.g., light-based markers and sensors. Further, the sensor suite **160** may additionally, or alternatively, include one or more of Hall Effect sensor, capacitive sensor, a compass, a color sensor, a light sensor, a potentiometer, and an optical tracking device, or the like. The sensor suite **160** may include additional sensors, several instances of each sensor, or may omit some of the example sensors discussed herein. The magnetometer **161** is a sensor that provides a bearing to a north pole of a magnetic field in the environment in which the AR system **100** is present. The magnetometer **161** may thus provide the AR system **100** with a directional sense in terms of yaw orientation with respect to magnetic north. The accelerometer **162**, which measures acceleration forces acting on the AR system **100**, may provide the AR system **100** with information of whether the AR system **100** (or a portion thereof) is moving, and in which direction(s). The gyroscope **163** measures orientation of the AR system **100** (or a portion thereof), and may provide the AR system **100** with information of whether the AR system **100** (or portion thereof) is level or to what degree the AR system **100** is tilted in one or more planes. The combination of the accelerometer **162** and gyroscope **163** may thus provide the AR system **100** with a direction sense in terms of pitch and roll with respect to gravity. The positioning system **164** may provide absolute positioning information (e.g., via a Global Positioning System (GPS) receiver) and relative positioning information (e.g., via a range finder, a camera sensor including image recognition software to identify objects and distances thereto based on known sizes).

In some embodiments, the AR application **121** uses the sensor suite **160** and/or data received from a remote device (e.g., the sensor **210**) to build or update the environmental map **122**, to determine where the AR system **100** is located on an existing environmental map **122**, and to identify when to display AR objects to the user on a display **170** of the AR system **100**.

The display **170** includes one or more devices used to output AR objects or a video feed to a user. In one example, the display **170** includes a projector and a transparent/translucent surface onto which AR images are projected by the projector and through with a user may view the environment into which the AR objects are inserted. In another example, a Liquid Crystal Display (LCD), Light Emitting Diode (LED), or other display technology is used to present a video feed into which AR objects have been programmatically inserted or overlaid for output to the user. In one or more embodiments, two displays **170** are provided, one for each eye of a user, such that the user is provided three-dimensional AR objects in the field of view. In one or more embodiments, the display **170** is transparent such that physical objects **122***a* (or real-world objects) are visible through the display **170**. In such an embodiment, one or more virtual objects **122***b* may be overlaid on the physical objects **122***a* and displayed on the display **170**.

A camera **180** is optionally included or activated in the AR system **100** to provide a video feed over which AR objects may be overlaid or into which AR objects may be programmatically inserted. The camera **180** may be omitted or deactivated in embodiments that use an external device to provide a video feed or a transparent surface that a user may view the environment through. In various embodiments, the camera **180** is provided in conjunction with image recognition software (stored on the memory **120**) to identify various real-world objects in the field of view, which once identified may be used by the AR application **121** for inclusion in an

environmental map **122** or as an anchor point for an AR object output to the user on the display **170**.

Additional Input/Output (I/O) devices may be included in various embodiments of an AR system **100**. The additional I/O devices may include various lights, displays, and speakers (e.g. LEDs, IR transmitter/receivers, speaker, buttons, microphones, light sensors, etc.) for providing output from the AR system **100** in addition to that provided by the display **170** or radio **150**. For example, a speaker is an I/O device **190** that provides audio output (e.g., of an audio component of a video feed or an AR sound effect). Further, the additional I/O devices may include a transmitter or a transceiver for communicating with other devices.

FIG. **2** illustrates an AR sensing system **200**, according to one or more embodiments. The AR sensing system **200** includes the AR system **100** and sensor **210**. The sensor **210** is a device remote to the AR system **100** that transmits sensor data to the AR system **100**. For example, the sensor **210** may be a magnetometer, accelerometer, a compass, or a light sensor, among others. In one embodiment, the sensor **210** is wireless connected to the AR system **100**. For example, the sensor **210** may include a wireless transmitter **212**. In one embodiment, the wireless transmitter is one of a Bluetooth transmitter, a Bluetooth Low Energy transmitter, and a Wi-Fi transmitter, among others. Further, in one embodiment, the sensor **210** is wirelessly connected with and transmits sensor data to the radio **150** of the AR system **100**.

In one or more embodiments, the sensor **210** may be attached to a real-word object and the sensing data corresponds to the position or a change in the position of the real-world object. For example, in various embodiments, the sensor **210** may include an attachment mechanism **218**. The attachment mechanism **218** may allow the sensor **210** to be attached to a real-world object (e.g., the door **302** of FIG. **3**). The adhesive may form a permanent bond between the sensor **210** and a real-word object. Alternatively, the sensor **210** may be removably attached to a real-world object such that the sensor **210** may be attached and removed from a real-world object without damage to the sensor **210** or the real-world object. In various embodiments, the attachment mechanism **218** includes an adhesive, magnet, a suction, cup, a hook, a hook-and-loop fastener, a pin, or a screw, among others. In one or more embodiments, the attachment mechanism **218** may be integral to or separate from the sensor **210**.

The sensor **210** may include a power source **214**. The power source **214** may be a radio frequency (RF) power source **214**. For example, the RF power source **214** may convert RF signals into power signals utilized to operate the sensor **210**. In one embodiment, the RF signals are provided by an RF generator positioned proximate to the sensor **210**. Alternatively, the power source **214** may be an alternating current (AC) power source or a direct current (DC) power source. Further, the power source **214** may be a rechargeable or non-rechargeable power source.

In various embodiments, the sensor **210** continuously transmits sensor data. In one or more embodiments, the sensor **210** transmits data in response to a connection being formed with an AR device (e.g., AR system **100**), and stops transmitting data in response to a termination of a connection between the sensor **213** and an AR device (e.g., the AR system **100**). In other embodiments, the sensor **210** transmits sensor data in response to an event associated with a corresponding real-world object. For example, the sensor **210** may transmit sensor data in response to a change of a position of a real-world object.

In various embodiments, the sensor **210** includes an optional receiver **216**. The receiver **216** may receive commands or instructions from an external source (e.g., the AR system **100** or another device). For example, the receiver **216** may receive instructions instructing the sensor **210** to begin or cease transmitting sensor data. Further, the receiver **216** may receive instructions to pair (e.g., connect) the sensor **210** with another device (e.g., the AR system **100**).

In one or more embodiments, the sensor **210** may be simultaneously connected to multiple devices. For example, the sensor **210** may be simultaneously connected to multiple AR devices. Further, in one or more embodiments, the sensor **210** automatically connects to an AR device when the AR device enters within communication range of the sensor **210**.

FIG. **3** illustrates a real-world environment **300**, according to one or more embodiments. The real-world environment **300** includes real-world objects **302**, **304** and the sensor **210**. The sensor **210** is illustrated as being in phantom as the sensor **210** is occluded by the door **302**. In one embodiment, the sensor **210** is attached to at least one of the real-world objects **302**, **304**. In other embodiments, the sensor **210** is attached to both of the real-world objects **302**, **304**. For example, a first portion of the sensor **210** is coupled to the door **302** and a second portion of the sensor **210** is coupled to the real-world object **304**.

The sensor **210** may be a magnetometer, where a first portion of the sensor is attached to the real-world object **302** and a second portion of the sensor is attached to the real-world object **304**. For example, the real-world object **302** may be a door and the real-world object **304** may be a wall and the sensor **210** transmits sensor data corresponding to a change in an angular position of the door **302** with regard to the wall **304**. For example, the sensor data may correspond to the door **302** changing from a closed position to an opened position or from the opened position to the closed position. In one embodiment, the magnetometer may instead be one or more Hall Effect sensors. However, in other embodiments, other types of sensing devices may be utilized or a combination of different types of sensing devices may be utilized.

In one or more embodiments, the determination of an open or closed real-world object (e.g., door **302**) may be based on an initial calibration procedure as is described in FIG. **7**. For example, in one embodiment, the sensor **210** is attached to the door **302** and initiates the AR application **121** to start a calibration procedure. In one embodiment, during calibration the door **302** is placed in an open position and first sensor data is acquired from the sensor **210** and the door **302** is placed in a closed position and second sensor data is acquired from the sensor **210**. As is described in the description of FIG. **7**, the first and second sensor data may be used to determine when the door **302** is in an open position and when the door **302** is in a closed position. In other embodiments, the door **302** may be positioned in other positions (e.g., in a position between an open position and a closed position) and corresponding sensing data may be acquired and utilized to determine when the door **302** is placed in those positions.

In one or more embodiments, more than one sensor may be attached to the real-world objects. For example, the sensor **210** and the sensor **310** may be attached to the door **302**. The sensor **210** may be a first sensor type and the sensor **310** may be a second sensor type. For example, the sensor **210** may be a magnetometer and the sensor **310** may be a compass. Further, the sensor **310** may be configured similar to that of the sensor **210**. Each of the sensors (e.g., the sensor

210 and 310) may be connected with the AR system 100. Each sensor 210, 310 may be independently connected to the radio 150 of the AR system 100. In one embodiment, the sensor 210 provides sensor data indicating a position or change in position of the door 302 relative to the wall 304 and the sensor 310 provides sensor data indicating a rotation of the door 302 relative to the wall 304.

In one or more embodiments, one or more environmental maps 122 are updated based on the sensor data. For example, one or more environmental maps 122 may be updated to show a change of position of one or more real-world objects and/or the inclusion or exclusion of real-world or virtual objects based on the change in position of a real-world object.

FIG. 4 illustrates a real-world environment 400, according to one or more embodiments. The real-world environment 400 includes real-world objects 302, 422, 424, 426, 428, 430, and 432. The real-world objects 302, 422, 424, 426, 428, 430, and 432 may be depicted as AR representations (e.g., an AR overlay) in a corresponding one or more environmental maps 122. In another embodiment, the real-world objects 302, 422, 424, 426, 428, 430, and 432 are viewable through the display 170 and virtual or AR elements are overlaid onto the display 170. In one embodiment, the door 302 is able to move from a first position (e.g., a closed position) to a second position (e.g., an open position). The door 302 is positioned along wall 428 of the room 430 and, when in the closed position, prevents objects within the room 430 from being seen by the user 402 or passing through the corresponding doorway. For example, when in the first position, the door 302 occludes one or more objects (virtual objects or real-world objects) from the user 402. As such, those objects are not included within an environmental map 122.

As shown, the sensor 210*a* is attached to the door 302. The sensor 210*a* is configured similar to that of the sensor 210. For example, the sensor 210*a* is wirelessly connected the AR system 100 and transmits data to the AR system 100 corresponding to a position or a change of a position of the door 302. In one embodiment, the sensor 210*a* is one of a magnetometer, an accelerometer, or a gyroscope, among others.

The real-world environment 400 further includes a window 422 and the sensor 210*b*. The sensor 210*b* may be coupled to or proximate the window 422. In one embodiment, the sensor 210*b* detects the position of the window 422 or a change in a position of the window 422. For example, the sensor 210*b* may be able to detect when the window 422 is an opened position or in a closed position. Further, the sensor 210*b* may detect a change in the position of the curtains 424. In one embodiment, the sensor 210*b* is one of an accelerometer, hall effect sensor, capacitive sensor, potentiometer, an optical tracking device, or a light emitter/sensor, among others. In the embodiment of FIG. 4, the window 422 is illustrated as being in the closed position.

The real-world environment 400 further includes curtains 424. The curtains 424 may at least partially block the window 422. The curtains 424 may be moved from a first position (a closed position as currently shown) to a second position. Moving the curtains 424 between the first and second position alters the amount of the window 422 that is visible by the user 402. For example, the curtains alter the amount of light that enters the real-world environment 400 via the window 422. In one embodiment, the sensor 210*b* transmits sensor data corresponding to the position or the change in position of the curtains 424. Additionally, or alternatively, the real-world environment 400 includes the sensor 210*c*. The sensor 210*c* may be a light sensor configured to detect a change of illumination in the real-world environment 400. For example, the change in illumination may be in response to the curtains 424 moving from a closed position to an opened position or an opened position to a closed position such that the amount of light that enters the real-world environment 400 via the window 422 increases or decreases, respectively. Further, the sensor 210*c* may be configured to detect a change in illumination caused by the lamp 426 being turned on or turned off. The sensor data from the sensor 210*c* is communicated to the AR system 100 such that the environmental map 122 may be updated with the change in illumination or a color of the illumination.

In one or more embodiments, the user 402 may hold an input controls 130. For example, the input controls 130 may be a joystick or another type of game piece that allows the user 402 to interact with the corresponding virtual environment. The input controls 130 may include one or more buttons or other input devices. Further, the sensor 210*d* is provided on the input controls 130. The sensor 210*d* may transmit sensor data corresponding to the position or a change in position of the input controls 130. In one embodiment, the sensor 210*d* is one of an accelerometer and a gyroscope, among others.

In various embodiments, multiple sensors of the same or a different type may be attached to one or more of the real-world objects. In one or more embodiments, sensors of the same type may be used for redundancy in the event that one or more sensors fail or as to confirm the accuracy of the sensor data of the sensors. Further, by using different types of sensors, different types of sensor data may be transmitted to the AR system 100. For example, a magnetometer and a hall effect sensor or a potentiometer may be attached to the door 302. The magnetometer may transmit data corresponding to the angular position of the door 302 relative to the wall 428 and the Hall Effect sensor or the potentiometer may transmit data corresponding to the door 302 being in a closed position or in an opened position.

FIG. 5 illustrates the real-world environment 400, according to one or more embodiments. As illustrated in the embodiment of FIG. 5, the state of one or more real-world objects (e.g., the door 302, the window 422, the curtains 424, and the lamp 426) differs from that of the corresponding real-world object of FIG. 4. For example, as compared to the embodiment of FIG. 4, the door 302 in the embodiment of FIG. 5 is an opened position. Accordingly, one or more objects that were occluded by the door 302 in the embodiment of FIG. 4 are now visible. For example, the person 500 is visible in the embodiment of FIG. 5 and may be rendered within the environmental map 122 utilized by the AR system 100. The person 500 may be a real-world object or a virtual object (e.g., AR overlay) within the environmental map 122.

Further, as illustrated in the embodiment of FIG. 5, the curtains 424 have been placed in an opened position. The change in position of the curtains 424 may be reported within sensor data of the sensor 210*b* and/or the sensor 210*c*. The amount of the window 422 that is visible is larger than that of the embodiment of FIG. 4. Further, a change in illumination due to the change in position of the curtains 424 may be reflected within an environmental mapping 122 based on the senor data transmitted by sensor 210*b* or 210*c*. In various embodiments, the change in illumination may occur even when the user 402 is facing away from the window 422 and such that a change in position of the curtains 424 is not visible to the user 402. Further, volumetric lighting (e.g., light entering through the window 422) may be incorporated within the environmental map 122 to

provide a more realistic illumination of virtual objects within the environmental map **122**. In various embodiments, the virtual lighting within the environmental map **122** may simulate illumination associated with a first time of day (e.g., day time or night time) and may be updated based the amount and time of light entering through the window **422** determined from sensor data received from the sensor **210***c*. Further, the AR representation of the window **422** may be modified based on the position of the curtains **424** as more of the window **422** is visible in FIG. **5** as compared to the embodiment of FIG. **4**.

FIG. **6** is a flow chart of a method **600** for updating an environmental map (e.g., the environmental map **122**), according to one or more embodiments. At operation **610**, an AR application **121** receives one or more environmental maps **122** with various real-world objects represented as AR representations within the environmental maps **122**. For example, the door **302**, the window **422**, the curtains **424**, the lamp **426**, and the wall **428** may be represented as AR objects in the one or more environmental maps **122**. In one embodiment, the door **302** may be represented as a black cube within the one or more environmental maps **122**. Additionally, the amount of illumination or the color of light generated within the one or more environmental maps may correspond to the position of the curtains **424** and/or the amount of or color of light produced by the lamp **426**. In various embodiments, the door **302** and the wall **428** prevent a virtual or physical object within the room **430** from being included within the one or more environmental maps and from being visible to the user **402**.

At operation **620**, the radio **150** receives sensor data from one or more sensors. Further, the AR application **121** determines a change of one or more real-world objects based on the sensor data. For example, the sensor data may be received from the sensor **210***a*, and the AR application **121** may determine that the door **302** changed from a closed position and an opened position or from an opened position to a closed position. Further, the sensor data may be received from the sensor **210***b*, and the AR application **121** may determine that curtains **424** changed from a closed position to an opened position or from an opened position to a closed position. Additionally, the sensor data may be received from the sensor **210***c* and the AR application **121** may determine that the amount of light produced by either the window **422** and/or lamp **426** has increased or decreased.

In various embodiments, sensor data may be received from one or more sensors (e.g., the sensors **210***a*, **210***b*, and/or **210***c*). The sensor data may be received from one or more of the sensors **210***a*, **210***b*, and/or **210***c* simultaneously. Further, the AR system **100** may receive sensor data from any one or more of the sensors **210***a*, **210***b* and/or **210***c* when the user **402** is within a transmission range of the one or more sensors.

At operation **630**, one or more AR objects within the environmental map **122** is updated by the AR application **121** based on sensor data received from one or more of the sensors **210***a*, **210***b* and **210***c*. For example, the environmental map may be updated to depict the AR representation of door **302** (e.g., a transparent cube) as being in an opened position in response to the sensor data received from the sensor **210***a*. Alternatively, the environmental map may be updated to depict the AR representation of the door **302** (e.g., a black cube) as being in a closed position in response to the sensor data received from the sensor **210***a*. In various embodiments, the environmental map **122** is updated by the AR application **121** to depict the AR representation of the curtains **424** as being in the open position and to depict an increased illumination in response to sensor data received from one or more of the sensors **210***b* and **210***c*. Further, the color of illumination within the one or more environmental maps **122** may be changed based on the sensor data received from one or more of the sensors **210***b* and **210***c*.

At operation **640**, the AR application **121** updates the environmental map **122** based on sensor data. For example the AR application **121** may update an AR representation of one or more new-world objects within the environmental map **122** in response the sensor data from one or more of the sensors **210***a*, **210***b*, and **210***c*. For example, a determination may be made that the door **302** is open based on the sensor data received from the sensor **210***a*, and in response, one or more real-world objects (e.g., the person **500**) or AR objects occluded by the door **302** when the door is in the closed position is visible by the user **402**. Accordingly, an AR representation of such real-world objects (e.g., the person **500**) or AR objects may be added to the environmental map **122**. Further, the person **500** may be allowed to move within the environmental map **122**. In one embodiment, if the person **500** is a computer generated virtual opponent in a game, the person **500** is allowed to move within the environmental map **122** and engage the user **402** in response to the door **302** being positioned in an open position.

In various embodiments, the illumination depicted within the one or more environmental maps **122** may be adjusted in response to the sensor data receive from the sensor **210***b* and/or the sensor **210***c*. For example, the amount of and/or color of the illumination may be adjusted within the one or more environmental maps **122**. In one embodiment, the illumination depicted within the environmental map **122** may be adjusted regardless of the position of the user **402** and the AR system **100**. For example, the illumination of the environmental map **122** may be adjusted even when the user **402** and the AR system **100** faces away from the lamp **426** and/or the window **422**.

At operation **650**, the updated environmental map **122** is displayed on the display **170**. For example, the updated environmental map **122** that includes one or more occluded or visible AR objects (e.g., the person **500**) is displayed on the display **170**.

FIG. **7** illustrates a flow chart for calibrating one or more sensors (e.g., the sensor **210**, **310**, **210***a*, **210***b*, **210***c* and **210***c*) according and determining the position of one or more real-world objects, according to one or more embodiments. At operation **710**, first calibration sensor data is received from a sensor in response to a real-world object being placed in a first state. In one embodiment, first calibration sensor data may be received from the sensor **210***a* when the door **302** is placed in a closed position. Further, first calibration sensor data may be received from the sensor **210***b* when the curtains **424** are placed in a closed position. Further, first calibration sensor data may be received from sensor **210***c* when the curtains **424** are in a closed position and/or the lamp **426** is turned off.

At operation **720**, second calibration sensor data is received from a sensor in response to a real-world object being placed in a second state. In one embodiment, second calibration sensor data may be received from the sensor **210***a* when the door **302** is placed in an opened position. Further, second calibration sensor data may be received from the sensor **210***b* when the curtains **424** are placed in an opened position. Further, second calibration sensor data may be received from sensor **210***c* when the curtains **424** are in an opened position and/or the lamp **426** is turned off.

At operation **730**, the AR application **121** determines the state of one or more real-world objects from received sensor

data. For example, the AR application **121** may determine that the door **302** is in one of an opened position or a closed position based on a comparison of received sensor data from the sensor **210***a* to the corresponding first and second calibration sensor data. Further, the AR application **121** determines a change in position of the door **302** between a closed position and an open position based on a comparison of received sensor data from the sensor **210***a* to the corresponding first and second calibration sensor data. In one or more embodiments, the AR application **121** may determine that the curtains **424** are in one of an opened position and a closed position based on a comparison of received sensor data from the sensor **210***b* to the corresponding first and second calibration sensor data. Further, the AR application **121** determines a change in position of the curtains **424** between a closed position and an open position based on a comparison of received sensor data from the sensor **210***b* to the corresponding first and second calibration sensor data. Additionally, the AR application **121** may determine that lamp **426** is turned on or turned off based on a comparison of the received sensor data from the sensor **210***c* to the corresponding calibration sensor data. In various embodiments, the AR application **121** determines that lamp **426** switched between from being turned off to being turned on based on a comparison of the received sensor data from the sensor **210***c* to the corresponding calibration sensor data.

In various embodiments, pre-defined profiles with corresponding sensor data may be utilized to determine the state of a real-world object. The pre-defined profiles may be generated for commonly used real-world objects (e.g., doors and/or windows) and the sensor data of the pre-defined profiled may be used as is described above to determine the state of a corresponding real-world object. The pre-defined profiles may be determined by completing the operations **710** and **720** for each real-world object for which a pre-defined profile is to be created. The pre-defined profiles include sensor data corresponding to two or more states of a real-world object. Further, the pre-defined profiles may be accessible by the AR application **121** when a corresponding real-world object is detected or indicated as being part of the environmental map **122**. In one or more embodiments, the AR application **121** may update the environmental map **122** in response to a comparison of received sensor data to the sensor data of the corresponding pre-defined profiles to determine a position or state of a real-world object.

In the current disclosure, reference is made to various embodiments. However, it should be understood that the present disclosure is not limited to specific described embodiments. Instead, any combination of the following features and elements, whether related to different embodiments or not, is contemplated to implement and practice the teachings provided herein. Additionally, when elements of the embodiments are described in the form of "at least one of A and B," it will be understood that embodiments including element A exclusively, including element B exclusively, and including element A and B are each contemplated. Furthermore, although some embodiments may achieve advantages over other possible solutions or over the prior art, whether or not a particular advantage is achieved by a given embodiment is not limiting of the present disclosure. Thus, the aspects, features, embodiments and advantages disclosed herein are merely illustrative and are not considered elements or limitations of the appended claims except where explicitly recited in a claim(s). Likewise, reference to "the invention" shall not be construed as a generalization of any inventive subject matter disclosed herein and shall not be considered to be an element or limitation of the appended claims except where explicitly recited in a claim(s).

As will be appreciated by one skilled in the art, embodiments described herein may be embodied as a system, method or computer program product. Accordingly, embodiments may take the form of an entirely hardware embodiment, an entirely software embodiment (including firmware, resident software, micro-code, etc.) or an embodiment combining software and hardware aspects that may all generally be referred to herein as a "circuit," "module" or "system." Furthermore, embodiments described herein may take the form of a computer program product embodied in one or more computer readable medium(s) having computer readable program code embodied thereon.

Program code embodied on a computer readable medium may be transmitted using any appropriate medium, including but not limited to wireless, wireline, optical fiber cable, RF, etc., or any suitable combination of the foregoing.

Computer program code for carrying out operations for embodiments of the present disclosure may be written in any combination of one or more programming languages, including an object oriented programming language such as Java, Smalltalk, C++ or the like and conventional procedural programming languages, such as the "C" programming language or similar programming languages. The program code may execute entirely on the user's computer, partly on the user's computer, as a stand-alone software package, partly on the user's computer and partly on a remote computer or entirely on the remote computer or server. In the latter scenario, the remote computer may be connected to the user's computer through any type of network, including a local area network (LAN) or a wide area network (WAN), or the connection may be made to an external computer (for example, through the Internet using an Internet Service Provider).

Aspects of the present disclosure are described herein with reference to flowchart illustrations or block diagrams of methods, apparatuses (systems), and computer program products according to embodiments of the present disclosure. It will be understood that each block of the flowchart illustrations or block diagrams, and combinations of blocks in the flowchart illustrations or block diagrams, can be implemented by computer program instructions. These computer program instructions may be provided to a processor of a general purpose computer, special purpose computer, or other programmable data processing apparatus to produce a machine, such that the instructions, which execute via the processor of the computer or other programmable data processing apparatus, create means for implementing the functions/acts specified in the block(s) of the flowchart illustrations or block diagrams.

These computer program instructions may also be stored in a computer readable medium that can direct a computer, other programmable data processing apparatus, or other device to function in a particular manner, such that the instructions stored in the computer readable medium produce an article of manufacture including instructions which implement the function/act specified in the block(s) of the flowchart illustrations or block diagrams.

The computer program instructions may also be loaded onto a computer, other programmable data processing apparatus, or other device to cause a series of operational steps to be performed on the computer, other programmable apparatus or other device to produce a computer implemented process such that the instructions which execute on the computer, other programmable data processing appara-

tus, or other device provide processes for implementing the functions/acts specified in the block(s) of the flowchart illustrations or block diagrams.

The flowchart illustrations and block diagrams in the Figures illustrate the architecture, functionality, and operation of possible implementations of systems, methods, and computer program products according to various embodiments of the present disclosure. In this regard, each block in the flowchart illustrations or block diagrams may represent a module, segment, or portion of code, which comprises one or more executable instructions for implementing the specified logical function(s). It should also be noted that, in some alternative implementations, the functions noted in the block may occur out of the order noted in the Figures. For example, two blocks shown in succession may, in fact, be executed substantially concurrently, or the blocks may sometimes be executed in the reverse order or out of order, depending upon the functionality involved. It will also be noted that each block of the block diagrams or flowchart illustrations, and combinations of blocks in the block diagrams or flowchart illustrations, can be implemented by special purpose hardware-based systems that perform the specified functions or acts, or combinations of special purpose hardware and computer instructions.

While the foregoing is directed to embodiments of the present disclosure, other and further embodiments of the disclosure may be devised without departing from the basic scope thereof, and the scope thereof is determined by the claims that follow.

What is claimed is:

1. A method for updating an environmental map of an augmented reality (AR) system, the method comprising:

receiving first sensor data, first calibration data, and second calibration data from a first sensor attached to a first physical object in physical space, wherein the first calibration data corresponds to a first state associated with a first position of the first physical object in the physical space, and the second calibration data corresponds to a second state associated with a second position of the first physical object in the physical space, the first position differing from the second position;

determining a change from the first state to the second state based on a comparison of the first sensor data to the first calibration data, and a comparison of the first sensor data to the second calibration data;

receiving second sensor data from a second sensor in the physical space;

determining a change of an amount of light within the physical space based on the second sensor data;

updating a first virtual object corresponding to the first physical object within the environmental map based on the change from the first state to the second state;

updating illumination within the environmental map based on the change of the amount of light within the physical space;

updating a second virtual object within the environmental map based on the second sensor data, wherein the second virtual object corresponds to a second physical object within the physical space; and

updating a presentation based on the updated first virtual object, the updated second virtual object, and the updated illumination.

2. The method of claim **1**, wherein the first sensor is powered via a wireless radio frequency power source.

3. The method of claim **1** further comprising:

adding a third virtual object within the environmental map based on the change from the first state to the second state, wherein the third virtual object was occluded by the first physical object when the first physical object was in the first position but is not occluded when the first physical object is in the second position; and

updating the presentation based on adding the third virtual object to the environmental map.

4. The method of claim **1**, wherein updating the illumination within the environmental map based on the change of the amount of light within the physical space comprises:

adjusting at least one of an illumination intensity and an illumination color.

5. The method of claim **1**, wherein the first sensor is one of a Hall Effect sensor, a magnetometer, a light sensor, an accelerometer, a potentiometer, a capacitive sensor, and a color sensor.

6. The method of claim **1**, wherein the first sensor is removable attached to the first physical object.

7. The method of claim **1**, wherein the first sensor data is transmitted in response to the AR system wirelessly connecting to the first sensor.

8. The method of claim **1**, wherein the second sensor is attached to the second physical object in the physical space and is configured to detect the change of the amount of light within the physical space.

9. The method of claim **8**, wherein

determining the change of the amount of light within the physical space based on the second sensor data comprises determining a change from a third state of the second physical object to a fourth state of the second physical object based on the second sensor data, wherein the third state corresponds to a first amount of light, and the fourth state corresponds to a second amount of light, and wherein updating the illumination within the environmental map based on the change of the amount of light within the physical space comprises:

adjusting an illumination intensity based on the change of the amount of light within the physical space.

10. A non-transitory computer-readable medium containing computer program code that, when executed by operation of one or more computer processors, performs an operation comprising:

receiving first sensor data, first calibration data, and second calibration data from a first sensor attached to a first physical object in physical space, wherein the first calibration data corresponds to a first state associated with a first position of the first physical object in the physical space, and the second calibration data corresponds to a second state associated with a second position of the first physical object in the physical space, the first position differing from the second position;

determining a change from the first state to the second state based a comparison of the first sensor data to the first calibration data, and a comparison of the first sensor data to the second calibration data;

receiving second sensor data from a second sensor in the physical space;

determining a change of an amount of light within the physical space based on the second sensor data;

updating a first virtual object corresponding to the first physical object within an environmental map based on the change from the first state to the second state;

updating illumination within the environmental map based on the change of the amount of light within the physical space;

updating a second virtual object within the environmental map based on the second sensor data, wherein the second virtual object corresponds to a second physical object within the physical space; and

displaying the updated first virtual object, the updated second virtual object, and the updated illumination on a display of an augmented reality system.

11. The non-transitory computer-readable medium of claim **10**, wherein the first sensor is powered via a wireless radio frequency power source.

12. The non-transitory computer-readable medium of claim **10**, wherein the operation further comprises:

adding a third virtual object within the environmental map based on the change from the first state to the second state, wherein the third virtual object was occluded by the first physical object when the first physical object was in the first position but is not occluded when the first physical object is in the second position; and

displaying the third virtual object as AR content based on adding the second virtual object to the environmental map.

13. The non-transitory computer-readable medium of claim **10**, wherein updating the illumination within the environmental map based on the change of the amount of light within the physical space comprises:

adjusting at least one of an illumination intensity and an illumination color.

14. The non-transitory computer-readable medium of claim **10**, wherein updating the environmental map based on the change from the first state to the second state comprises changing a position of the first virtual object in the environmental map.

15. An augmented reality system, comprising:

a display;

a radio configured to:

receive first sensor data, first calibration data, and second calibration data from a first sensor attached to a first physical object in physical space, wherein the first calibration data corresponds to a first state associated with a first position of the first physical object in the physical space, and the second calibration data corresponds to a second state associated with a second position of the first physical object in the physical space, the first position differs from the second position; and

receive second sensor data from a second sensor in the physical space; and

a processor configured to:

determine a change from the first state to the second state based on a comparison of the first sensor data to the first calibration data, and a comparison of the first sensor data to the second calibration data;

determine a change of an amount of light within the physical space based on the second sensor data;

update a first virtual object corresponding to the first physical object within an environmental map based on the change from the first state to the second state;

update illumination within the environmental map based on the change of the amount of light within the physical space;

update a second virtual object within the environmental map based on the second sensor data, wherein the second virtual object corresponds to a second physical object within the physical space; and

displaying the updated first virtual object, the updated second virtual object, and the updated illumination on the display.

16. The augmented reality system of claim **15**, wherein the first sensor is powered via a wireless radio frequency power source.

17. The augmented reality system of claim **15**, wherein the first sensor is one of a Hall Effect sensor, magnetometer, a light sensor, an accelerometer, a potentiometer, and a color sensor.

18. The augmented reality system of claim **15**, wherein the processor is further configured to:

add a third virtual object within the environmental map based on the change from the first state to the second state, wherein the third virtual object was occluded by the first physical object when the first physical object was in the first position but is not occluded when the first physical object is in the second position; and

display the third virtual object as AR content based on adding the second virtual object to the environmental map.

19. The augmented reality system of claim **15**, wherein updating the illumination within the environmental map based on the change of the amount of light within the physical space comprises:

adjusting at least one of an illumination intensity and an illumination color.

* * * * *